MOTEUR

ENSEMBLE

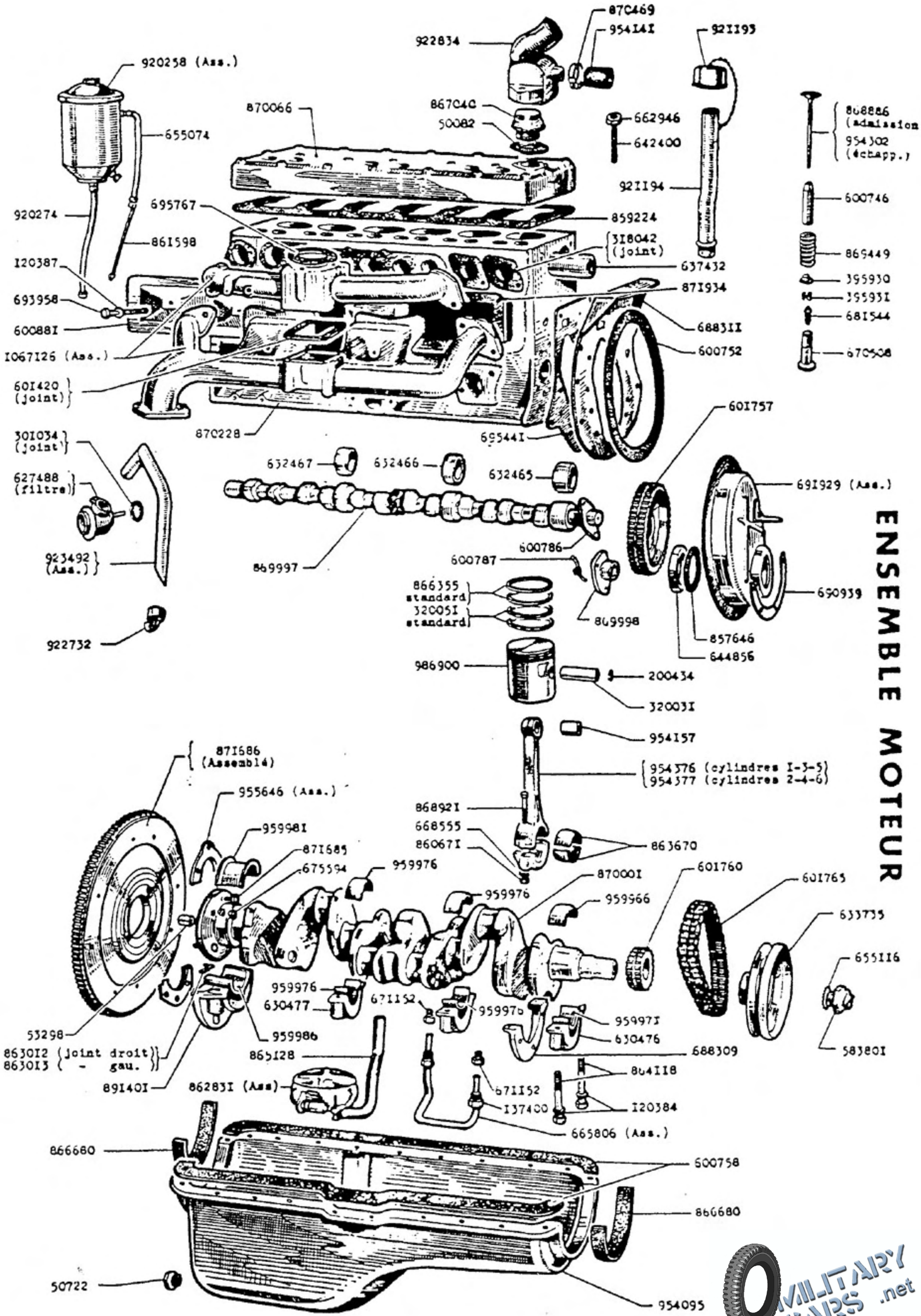

MILITARY CARS .net
http://www.militarycars.net